MEASUREMENT AND CONTROL

SEE MORE AT SORInc.com

Request Quote

Pivot Seal Pressure Switches for Fluid Power Applications

SOR® Pivot Seal pressure switches

are rugged, field-mounted instruments that incorporate a flexible modular design providing cost effective sensing solutions.

The pressure sensing element of the Pivot Seal pressure switch is a force-balance, piston-actuated assembly sealed by an o-ring. As with all SOR pressure switches, the actual motion of the piston to actuate the micro switch is only several thousandths of an inch, resulting in minimal o-ring wear. Media pressure on the area of the piston counteracts the force of the range spring (adjustable by the adjusting nut screw) and moves the piston shaft and the force transmitter to directly actuate the electrical snap-action switching element.

Application Information

The design of the piston/port assembly results in the device being well-suited for a wide variety of high pressure fluid power (hydraulic) applications, especially where high-shock pressures and high-cycle rates are expected, and where normal industrial clean hydraulic fluid is used.

Features and Benefits

Modular Design
- Wide range of electrical enclosures available.

Robust Construction
- Rugged, high cycle rate tolerance.
- Long life.
- Not critical to vibration, high overrange and proof pressures.
- Excellent corrosion resistance to hostile environments.
- Enclosure ratings: NEMA 1, 4, 4X, 7, or 9 available.
- Ingress protection rating up to IP66.

Instrument Quality
- High repeatability.
- Narrow dead band.
- Negligible temperature effect.

Wetted Parts
- Wide selection of materials.

Field Adjustability
- Excellent resolution of set points adjustment, no special tools required.
- No-charge factory calibration.

Agency Listings/Certification
- Select models with ATEX, IECEx, CSA, GOST R, INMETRO, Rostechnadzor (RTN), TIIS, UL
- Meets most code and customer requirements.

Safety Certified to IEC 61508 (SIL)
- SOR products are certified to IEC 61508 for non-redundant use in SIL1 and SIL2 Safety Instrumented Systems for most models. For more details or values applicable to a specific product, see the Safety Integrity Level Quick Guide (Form 1528).

Shock/Vibration
- Select models tested to MIL-S-901D (Navy shock test.
- Select models tested to MIL-S-167 vibration test.

Delivery
- Routine shipments 7 to 10 working days.
- Emergency shipments via air same day.

Service
- Factory service engineers and area factory representatives provide effective and prompt worldwide service.

Warranty
- 3 years from date of manufacture.

Model Number System

2NN-K3-P1-D1A-PP

Piston	Housing	Switching Element	Spring	O-Ring Seal	Pressure Port	Accessories

Quick Selection Guide

Basic Pivot Seal pressure switches with standard wetted parts are normally suitable for a wide variety of high-pressure fluid power (hydraulic) applications, especially where high-shock pressures and high-cycle rates are expected, and where normal industrially clean hydraulic fluid is used. Refer to the Quick Selection Guide section on page 3. Corrosive service and particular customer requirements may require optional components. Refer to the How to Order section on this page or the dedicated page to locate optional components, such as: housings, switching elements, o-ring seals, pressure ports and accessories. Each position in the model number, except Accessories, must have a designator.

Applications

The Pivot Seal pressure switches in this catalog are suitable for a wide variety of fluid power (hydraulic) applications. Specific application requirements can normally be met by selecting optional components, such as, switching elements and o-ring seal. Certain applications may require customized specials. Consult area factory representative or the factory.

Note: The SOR Pivot Seal is not suitable for process applications. Refer to Form 216 – Pressure and Vacuum Switches for Process Applications.

Weatherproof, Conventional Explosion Proof and Hermetically Sealed Explosion Proof models are presented in this catalog.

How to Order

Steps 1 through 5 are required; step 6 is optional. Orders must have complete model numbers, i.e., each component must have a designator.

Step 1: Select **Adjustable Range** according to set point (page 4).

Step 2: Select **Housing** for type of service (page 5).

Step 3: Select electrical **Switching Element** for housing and electrical service (pages 6 & 7).

Step 4: Select **O-Ring Seal** for process compatibility and containment (page 7).

Step 5: Select **Pressure Port** for process connection (page 7).

Step 6: Select **Accessories** as required for service (page 8).

If Agency Listed, Certified or Approved pressure switches are required, see page 9 & 10 for components that must be specified.

Pivot Seal Pressure Switches

Quick Selection Guide

Specify model number from table below.

Model Number	Range	Typical Dead Band (psi)	Electrical Rating	Electrical Connection	Housing Material
2NN - K3 - P1 - D1A	100 to 1900	80	15 amps 250 VAC	3/4" NPT(F)	Aluminum
2NN - K5 - P1 - D1A	500 to 3000	100			
3NN - K45 - P1 - D1A	1000 to 7000	180			

Weatherproof NEMA 4, 4X, IP66

Model Number	Range	Typical Dead Band (psi)	Electrical Rating	Electrical Connection	Housing Material
2L - K3 - P1 - D1A	100 to 1900	80	15 amps 250 VAC	3/4" NPT(F)	Cast Iron
2L - K5 - P1 - D1A	500 to 3000	100			
3L - K45 - P1 - D1A	1000 to 7000	180			

Hazardous Locations — Class I, Groups C & D: Class II, Groups E, F, & G; Divisions 1 & 2 (as an outlet box)

Model Number	Range	Typical Dead Band (psi)	Electrical Rating	Electrical Connection	Housing Material
2AG - EF3 - P1 - D1A	100 to 1900	80	5 amps 250 VAC	1/2" NPT(M)	Aluminum
2AG - EF5 - P1 - D1A	500 to 3000	100			
3AG - EF45 - P1 - D1A	1000 to 7000	180			

Hazardous Locations — Class I, Groups A, B, C, & D: Class II, Groups E, F, & G; Divisions 1 & 2

Standard Construction

Pressure Port	1/4" NPT(F)
Overrange	8,000 psi
Proof Pressure	10,000 psi

Wetted Materials

Piston	300 Series Stainless Steel
O-Ring	Buna-N
Pressure Connection	Brass

Design and specifications are subject to change without notice. For latest revision, see www.sorinc.com.

Pivot Seal Pressure Switches

Step 1: Adjustable Range

2NN-K**3**-P1-D1A-PP

Piston-Spring Designators	Adjustable Range		Typical Dead Band		Overrange Pressure		Proof Pressure	
	psi	bar	psi	bar	psi	bar	psi	bar
2 - 3	100 to 1900	7 to 130	80	5	8000	550	10,000	700
2 - 5	500 to 3000	35 to 210	100	7				
3 - 45	1000 to 7000	70 to 480	180	12				

Notes

1. Ambient temperature range: -65 to 180°F (-54 to 76°C). Check restrictions, page 6, for optional electrical switching elements and page 7 for optional o-ring seals.
2. Bar values may not be exact mathematical conversions. They are practical equivalents.

Dead Band Considerations

1. Dead band values are expressed as typical expected at mid-adjustable range using the standard K switching element.
2. A dead band multiplier must be applied to the typical dead band value shown in adjustable range above whenever an optional switching element is specified.
3. Dead band can be widened by selecting an optional switching element with a multiplier greater than 1.0.

Example: Model 2NN-**L**3-P1-D1A-PP
Typical Dead Band: 80 psi
L Switching Element Multiplier 1.5
Corrected Typical Dead Band 80 x 1.5 = 120 psi

Switching Element Designators	Dead Band Multiplier
A, B, D, E, EF, G, GA, J, JF, JR, K, KA, KB, M, W, Y	1.0
AF, BD C, EB, EE, EG, GG, JB, JG, JJ, KK, L, S, YY	1.5
AA, AG, BB, LL	2.0

Pivot Seal Pressure Switches

Step 2: Housings

2NN-K3-P1-D1A-PP

General Purpose — NEMA 1

Electrical: 3/4" NPT(F)-Right
Material: Aluminum

PP

See Agency Listings pages 9 & 10.
See Switching Element Groups 1, 2, 3, 4 page 6.

Electrical: 3/4" NPT(F)-Left, Right
Material: Aluminum

P3

See Switching Element Groups 1, 2, 3, 4 page 6.

Electrical: Exposed Contacts
Material: Aluminum
Open bracket with exposed switching element does not meet NEMA 1.

H3

See Switching Element Groups 1, 3 page 6.

Weatherproof —NEMA 4, 4X, IP66

Electrical: 3/4" NPT(F)-Right
Material: Aluminum

NN

See Agency Listings pages 9 & 10.
See Switching Element Groups 1, 2, 3, 4 page 6.

Electrical: 3/4" NPT(F)-Left, Right
Material: Aluminum

N3

See Agency Listings pages 9 & 10.
See Switching Element Groups 1, 2, 3, 4 page 6.

Electrical: 3/4" NPT(F) - Right
Material: Aluminum
Cover: Heavy duty with Viton gasket

N4

Switching Element Groups 1, 2, 3, 4 page 6.

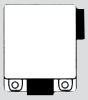

Electrical: 3/4" NPT(F)-Right
Material: Carbon Steel

N6

See Switching Element Groups 1, 3 page 6.

Electrical - RN: 3/4" NPT(F)-Right
Electrical - RM: M20 x 1.5 - Right
Standard terminal block
Material: Aluminum

RN
RM

See Agency Listings pages 9 &10.
Switching Element Groups 1, 2, 3 & 5 on page 6.

Electrical-RT: 3/4" NPT(F)-Right
Electrical-RS: M20 x 1.5-Right
Standard terminal block
Material: 316SS

RT
RS

See Agency Listings pages 9 & 10.
Switching Element Groups 1, 2, 3 & 5 on page 6.

See Form 987 for Omni Weatherproof Pivot Seal Pressure Switches.

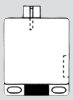

Electrical: 3/4" NPT(F)-Right
Manual reset only
Standard terminal block
Material: Aluminum

RB

See Agency Listings pages 9 &10.
See Switching Element Group 7 page 6.

Hazardous Locations — Hermetically Sealed NEMA 4, 4X, 7, 9, IP66

Contains UL Listed and CSA Certified hermetically sealed switching element.

Electrical: 1/2" NPT(M)-Top
Material: Copper-free** aluminum

AG

See Switching Element Group 5 page 6.

ATEX Approved
(EEx d IIC T5/T6)

Electrical: 1/2" NPT(M)-Top
Material: Copper-free* aluminum

BG

See Agency Listings pages 9 & 10.
Switching Element Group 5, page 6.

Contains UL Listed and CSA Certified hermetically sealed switching element.

Electrical: 1/2" NPT(M)-Top
Material: 316SS

AH

See Switching Element Group 5 page 6.

ATEX Approved
(EEx d IIC T5/T6)

Electrical: 1/2" NPT(M)-Top
Material: 316SS

BH

See Agency Listings pages 9 & 10.
Switching Element Group 5 page 6.

Contains UL Listed and CSA Certified hermetically sealed switching elements.

Electrical: 3/4" NPT(F) - Top
Material: Copper-free** aluminum
Weatherproof: NEMA 4/4X

***BA**

See Switching Element Group 6 page 6.

Hazardous Locations — Conventional Explosion Proof NEMA 4, 4X, 7, 9, IP66

UL Listed Class I, Group C & D; Class II, Group E, F, G; Divisions 1 & 2 as an outlet box only.
Electrical: 3/4" NPT(F)-Right
Material: Cast Iron
Weatherproof with Option CG

***L**

See Switching Element Groups 1, 3 page 6.

UL Listed Class I, Group C, D; Class II, Group E, F, G; Divisions 1 & 2 as an outlet box only.
Electrical: 3/4" NPT(F)-Right
Material: Copper-free** aluminum
Weatherproof

***LC**

See Switching Element Groups 1, 2, 3, 4 page 6.

Separate electrical and Set Point adjustment compartments
Weatherproof
Standard terminal block
See Agency Listings pages 9 & 10.

UL Listed Class I, Group C & D; Class II, Group E, F, G; Divisions 1 & 2 as an outlet box only.
Electrical: 3/4"NPT(F)-Left, Right, Top
Material: Cast Iron
Weatherproof with Option CG

***S**

See Switching Element Groups 1, 3, 7 page 6.

UL Listed Class I, Group C, D; Class II, Group E, F, G; Divisions 1 & 2 as an outlet box only.
Electrical: 3/4" NPT(F)-Left, Right, Top
Material: Copper-free** aluminum
Weatherproof

***SC**

Switching Element Groups 1, 2, 3, 4, 7 page 6.

***B3** Electrical: 3/4" NPT(F)-Left, Right
Material: Aluminum
Require PB or SB accessory option.

***B4** Electrical: M20 x 1.5-Left, Right
Material: Aluminum
Require PB or SB accessory option.

***B5** Electrical: M20 x 1.5-Left, Right
Material: Cast Iron

***B6** Electrical: 3/4" NPT(F)-Left, Right
Material: Cast Iron

Switching Element Groups 1, 2, 3, 4, 5 page 6.

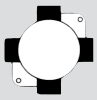

Class I, Group A, B, C & D; Class II, Group E, F, G; Divisions 1 & 2 as an outlet box only.
Electrical: 3/4" NPT(F)-Left, Right, Top
Material (Housing): Aluminum
Material: (Cover): Aluminum
Weatherproof with Option CG

***TA**

See Switching Element Groups 1, 3 page 6.

Explosion Proof IIB-T4. Separate electrical and Set Point adjustment compartments.
Aluminum. Six-place screw-type terminal block is standard. Right hand electrical outlet: PF 3/4" (F)

***J4**

See Switching Element Groups 1, 2, 3, 4 page 6.

* Not recommended for direct mount where vibration is expected. Housing should be securely mounted to a flat surface (bulkhead or panel rack) or pipe stanchion. ** Consult the factory.

Pivot Seal Pressure Switches

Step 3: Switching Element

2NN-**K**3-P1-D1A-PP

Switching Element Group/Housing Compatibility

Group 1	Group 2	Group 3	Group 4	Group 5	Group 6	Group 7
A, AA, B, BB, BD*, C**, E, EE, G, J, JJ, K, KA, L, S, W, Y	GG, KK, LL, YY	T	H	AF, AG, EF, EG, JF, JG	EB, JB, JR, KB	D, M

*BD only available with RN, RT housings. **C micro switch is not available in L, S, and TA housings.

Cross reference compatibility chart above to ensure that switching element will fit in housing.

Switching Element Service	Electrical Contact Type	Electrical Connection Type	AC Rating		DC Rating Resistive				Dead Band Multiplier		Designator	
			Volts	Amps	Volts	Amps	Volts	Amps	SPDT	DPDT	SPDT	DPDT
Normal Service AC	SPDT – (1) SPDT DPDT – (2) SPDT Synchronized actuation/deactuation at increasing/decreasing Set Points. Single Switching Element Double Switching Element	K, KA, G, L, C, N, S, Y, W Switching Elements – Screw Terminals All other switching elements – 18" 18 AWG Color coded wire leads except when terminal blocks are specified.	250	15	125	.4*	30	5*	1	1.5	K	KK
Low Power Gold Contacts			125	1	-	-	28	1*	1	-	KA	N/A
			125	1	-	-	30	1	1	1.5	J	JJ
Wide Dead Band AC			250	15	125	.5	-	-	1	1.5	G	GG
AC or DC			250	11	125	.5*	30	5	1	2	A	AA
Wide Dead Band DC			250	15	-	-	30	10*	1.5	2	L	LL
Narrow Dead Band DC			250	5	125	.5*	30	5*	1	1.5	E	EE
Very Wide Dead Band DC			250	15	125	.5	-	-	1.5	-	C	N/A
Very High-Capacity DC Magnetic Blow-Out			125	10	125	1.5 Minimum 10 Maximum	-	-	1.5	-	S	N/A
Hi-Ambient Temperature Rating - 400°F			250	5	125	.3	-	-	1	2	B	BB
			250	5	125	.5*	-	-	1	1.5	Y	YY
			250	5	125	.3*	-	-	1	-	W	N/A
Manual Reset - Decreasing Pressure (Automatic Actuation Increasing Pressure)			250	15	125	.5	-	-	1	-	D	N/A
Manual Reset - Increasing Pressure (Automatic Actuation Decreasing Pressure)											M	N/A
Corrosion Resistant Explosion Proof Hermetically Sealed Switching Element			250	15	125	.4*	30	5*	1	-	KB	N/A
			250	5	125	.5*	30	5*	-	1.5	N/A	EB
			250	11	125	.5*	30	5	1.5	2	AF	AG
			250	5	125	.5*	30	5*	1	1.5	EF	EG
Corrosion Resistant Explosion Proof Lower Power Service Hermetically Sealed Gold Contacts			125	1	-	-	28	1*	1	-	JR	N/A
			125	1	-	-	30	1	-	1.5	N/A	JB
			125	1	-	-	30	1	1	1.5	JF	JG
ATEX Approved II 2 G EEx d IIC Microswitch Only			250	7	250	.25	30	7	1.5	-	BD	N/A

Pivot Seal Pressure Switches

Step 3: Switching Element

2NN-**K**3-P1-D1A-PP

Notes

1. Double switching elements have wire leads except when supplied in housings RN, RT RB, B3, B4, B5, B6 and J4. Terminal blocks are standard in these housings.
2. Dead band multipliers must be applied to the typical dead band figures given in the specification tables on page 5.
3. Switching element ambient temperature limits:

-65 to 400°F	(-54 to 204°C)	B, Y, W
-65 to 250°F	(-54 to 120°C)	A, E, J
-40 to 167°F	(-40 to 75°C)	AF, AG, EB, EF, EG, JB, JF, JG, JR, KB
-13 to 158°F	(-25 to 70°C)	BD
-65 to 180°F	(-54 to 76°C)	All others

4. The hermetically sealed switching element capsule is UL Listed, CSA Certified, ATEX and TestSafe Approved as an explosion proof snap switch according to the following table with conditions and exceptions specified in Note 3.
5. Switching Elements W & Y have Elgiloy springs.
6. Certain switching elements can handle greater voltage and/or amperage. Consult the factory should your requirements exceed catalog values. All switching elements above except BD are UL Recognized and CSA Certified. The DC current ratings marked with an asterisk (*) are not UL Listed but have been verified by testing and/or experience.

Agency	Hazardous Location Conditions	Designator
UL Listed CSA Certified	Class I, Groups A, B, C & D; Class II, Groups E, F & G; Divisions 1 & 2	AF, EF, AG, EG, KB, EB, JB, JF, JG, JR
TestSafe Approved	Ex s IIC T6 IP65 Class 1, Zone 1 DIP T6 IP65	AF, EF, AG, EG, KB, EB
ATEX Approved	II 2 G EEx m II	AF, EF, AG, EG, JF, JG

CAUTION: The switching element assembly has been precisely positioned in the housing at the factory for optimum performance. Any inadvertent movement or replacement in the field will degrade performance, could render the device inoperative, and can void the warranty unless factory authorized procedures are followed.

Step 4: O-Ring Seal

2NN-K3-**P1**-D1A-PP

O-Ring (Wetted)	Designator
Buna N (Standard)	P1
EPR	Y1
Viton	S1

O-Ring Material	°F	°C
Viton	32 to 250	0 to 120
Buna-N EPR	32 to 200	0 to 93

Notes

1. Wetted parts have been selected as representing the most suitable commercially available material for use in the service intended. However, they do not constitute a guarantee against corrosion or permeation, since processes vary from plant to plant and concentration of harmful fluids, gases or solids vary from time to time in a given process. Empirical experience by users should be the final guide. Alternate materials based on this are generally available.
2. This table shows allowable minimum and maximum temperatures for o-rings.

Step 5: Pressure Port

2NN-K3-P1-**D1A**-PP

Material	Connection Size	Designator
Brass	1/4" NPT(F)	D1A
316SS/316LSS		C1A
Brass	9/16-18" (F) SAE Straight Thread O-Ring Seal	D4C
316SS/316LSS		C4C

Note

C1A pressure port is standard on AH and BH housings. D1A is standard on all other housings. Brass not available on B-series housings.

Accessory/Option & Description		Designator
Neoprene cover gasket (o-ring) to make L, S and TA explosion proof housings weatherproof.		CG
ATEX/IECEx approved pressure switch. See Agency Listings on pages 9 & 10 for details.		CL
CSA Certified pressure switch. Available with PP, NN, RB, RN, RT, B3 and B6. Housing has earth (ground) lug. See Agency Listings on pages 9 & 10 for details.		CS
Canadian Registration Number (CRN) - Process ratings may be affected. Consult the factory for details.		CV
Cemented cover gasket on weatherproof housings.		GC
Sealed electrical lead adapter. Provides protection to housing interior, switching element dry side of pressure sensing assembly from condensate in electrical conduit and corrosive atmospheres. Protrudes approximately 2" from housing.		GG
Universal terminal box. Stainless steel. 1/2" NPT(F). ATEX/IECEx Approved Ex db IIC T4, T5, T6 Gb		HB
Universal terminal box. Stainless steel. M20 x 1.5(F). ATEX/IECEx Approved Ex db IIC T4, T5, T6 Gb		HBME
Universal terminal box. Stainless steel. 1/2" NPT(F). FM Approved and CSA Certified. Explosion proof Class I, Groups A, B, C, D; Class II, Groups E, F, G, Class III Division 1 (NEMA 4X, IP66)		HT
Breather Drain	Crouse Hinds ECD-15 for Hazardous Locations Class I, Groups C & D; Class II, Groups E, F and G; on S or SC housings only.	KK
	Sintered metal plug in weatherproof housing.	
Terminal block. 6-place compression type standard in B and R series housings. Optional in LC and SC housings. 6-place screw-type standard in J4 housing.		LL
INMETRO approved pressure switch. See Agency Listings on pages 9 & 10 for details.		NM
Multi-Listed pressure switch. ATEX, IECEx, CSA & UL. Available with B3 & B6 housings. See Agency Listings on pages 9 & 10 for details.		ML
Carbon steel body with stainless steel adjusting nut. (Not available with B5 & B6 housings)		PB
Pipe (stanchion) mounting kit for (1-1/2 to 2" pipe). Order as a separate line item for UL Listed and CSA Certified pressure switches.		PK
Tag, fiber. Attached with plastic wire to housing. Stamped with customer specified tagging information.		PP
Powder coat epoxy coating. No coating on stainless steel parts or plated screws. (500 hours-salt spray)		PY
Tag, stainless steel. Attached with stainless steel wire to housing. Stamped with customer specified tagging information. (2 lines, 18 characters and spaces per line.)		RR
Stainless steel body, force transmitter and adjusting nut for corrosive environments. Standard on stainless steel housings.		SB
Explosion proof and weatherproof electrical junction box with screw terminals. Aluminum 3/4" NPT(F) top or right conduit connections as required. UL Listed and CSA Certified Class I, Groups A, B, C & D; Class II, Groups E, F & G; Division 1 & 2. (L, LC, S, SC and TA housing.) Includes cover o-ring for weatherproof applications.		TB
Oversize stainless steel nameplate or separate stainless steel tag. Permanently attached to housing. Stamped with customer specified tagging information.		TT
Fungicidal varnish. Covers exterior and interior except working parts.		VV
UL listed pressure switch. Available with B3 & B6 housings. See Agency Listings on pages 9 & 10 for details.		WV
"X" is used as a suffix to the Model Number for special requirements not keyed elsewhere in the model number by an "X". Each "X" must be completely identified in the text of the order or inquiry. When more than one "X" is required, use "X" followed by the number of such items. For example, "X3" means three separate otherwise unidentifiable requirements.		X
Epoxy coating. Exterior only. Polyamide epoxy with 316SS pigment.		YY
Chained cover with captive screws to conform to former JIC specification.		ZZ

Representative Information Only: A slash and a three-digit number (/000) appearing after the last Accessory designator letter in the model number denotes special administrative procedures with respect to factory representatives. It is not part of the model number and is used only by the factory or a factory representative.

Pivot Seal Pressure Switches

Test Certificates

Certificates	C1	C2	C3	C4	C5	C6	C8	B1	B4	B5	B6	B7	A1	A2	A3	A4	A5	A6	A7	A8
Calibration	◆							◆	◆	◆	◆	◆	◆	◆	◆	◆	◆	◆	◆	◆
Hydrostatic Pressure Test		◆						◆	◆					◆	◆	◆	◆	◆	◆	◆
Inspection Report			◆					◆	◆	◆	◆	◆			◆	◆		◆	◆	◆
Compliance / Conformance				◆								◆	◆	◆		◆	◆			◆
Dielectric Test					◆				◆	◆									◆	
Insulation Resistance						◆			◆	◆	◆							◆	◆	◆
Typical Material of Wetted Parts							◆	◆	◆				◆				◆	◆		

Agency Listings

CSA

For Hazardous Locations Class I Groups B, C, D; Class II, Groups E, F, G; Divisions 1 & 2

Piston	Housing	Switching Element	Spring	Diaphragm & O-Ring	Pressure Port Material	Pressure Port Connection Size	Accessories
ALL	B3, B6	A, AA, AF, AG, B, BB, C, E, EE, EF, EG, G, GG, H, J, JF, JG, JJ, K, KA, KK, L, LL, S, T, W, Y, YY	ALL	ALL	C Only	ALL	CS or ML Required PB or SB Required with B3 housing All except CG, GC, GG, HB, HT, KK, LL, ME, TB, ZZ

General Purpose and Weatherproof (CSA Enclosure 4)

Piston	Housing	Switching Element	Spring	Diaphragm & O-Ring	Pressure Port Material	Pressure Port Connection Size	Accessories
ALL	PP (General Purpose)	A, AA, B, BB, C, E, EE, G, GG, GA, H, J, JJ, JL, K, KK, KA, L, LL, N, S, T, W, Y, YY	ALL	ALL	ALL	ALL	CS Required
	NN (Enclosed 4)						All except GC, LL
	RN (Enclosed 4) RT	A, AA, AF, AG, B, BB, C, E, EE, EF, EG, G, GG, GA, H, J, JJ, JL, JF, JG, K, KK, KA, L, LL, N, S, T, W, Y, YY					
	RB (Enclosed 4)	D, DA, M (Manual Reset only)					

Pivot Seal Pressure Switches

Agency Listings

TIIS For Hazardous Locations Rating: Explosion Proof IIB T4

Piston	Housing	Switching Element	Spring	Diaphragm & O-Ring	Pressure Port Material	Pressure Port Connection Size	Accessories
ALL	J4	A, AA, B, BB, C, E, EE, G, GG, H, J, JJ, K, KK, KA, L, LL, N, S, T, W, Y, YY	ALL	ALL	ALL	ALL	BB, NN, PB, PK, PP, RR, SB, TT, VV, YY, X

UL For Hazardous Locations Class I Groups B, C, D; Class II Groups E, F, G; Divisions 1 & 2

ALL	B3, B6	A, AA, AF, AG, B, BB, C, E, EE, EF, EG, G, GG, H, J, JF, JG, JJ, K, KA, KK, L, LL, S, T, W, Y, YY	ALL	ALL	C Only	ALL	WV or ML Required PB or SB Required with B3 housing All except CG, GC, GG, HB, HT, KK, LL, ME, TB, ZZ

ATEX/IECEx or INMETRO Ex db IIC T6/T5 Gb

Piston	Housing	Switching Element	Spring	Diaphragm & O-Ring	Pressure Port Material	Pressure Port Connection Size	Accessories
ALL	B3, B4, B5, B6	A, AA, AF, AG, B, BB, C, E, EE, EF, EG, G, GG, H, J, JF, JG, JJ, K, KA, KK, L, LL, S, T, W, Y, YY	ALL	ALL	C Only (B3/B6 Hsgs) or ALL (B4/B5 Hsgs)	ALL	CL (for all Hsgs or ML (for B3/B6 Hsgs) Req'd for ATEX/IECEx NM Required for INMETRO PB or SB Required with B3 & B4 housings All except CG, GC, GG, HB, HT, KK, LL, ME, TB, ZZ
ALL	BG, BH	AF, AG, EF, EF, JF, JG	ALL	ALL	ALL	ALL	BB, PP, RR, TT, TP, VV, YY, HB, HBME NM Required for INMETRO

Rostechnadzor (RTN) Certificate

Permit for instruments used and operated in hazardous industrial facilities in Russia. Standard on most models. Certificate available on request.

Notes

1. Internal/external case ground (earth) screws provided.
2. Customer/user is responsible for electrical hook-up to terminal block and compliance with ATEX and JIS/RIIS codes.

Approximate Weights

Actual shipping weights may vary from charted values because of product material, configurations and packaging requirements.

Housing	Weight (lbs.)	(kgs)
AG, BG, H3	1.5	0.75
AH, BH, NN, N3, N4, PP, P3	2	1
RB, RM, RN	2.5	1.25
N6	3	1.5
RS, RT	3.5	1.75

Housing	Weight (lbs.)	(kgs)
LC, SC	4	2
BA, L, S	5	2.5
TA	6	3
B3, B4	8	4
B5, B6	10	5

Notes

1. PK Pipe Kit adds approximately 1.5 lbs. (0.7 kgs).
2. TB Junction Box adds approximately 4.5 lbs. (2 kgs).

Pivot Seal Pressure Switches

Glossary of Terms

SOR recognizes that there is no industry convention with respect to terminology and definitions pertinent to pressure switches. This glossary applies to SOR Pressure Switches.

Pressure Switch

A bi-stable electromechanical device that actuates/deactuates one or more electrical switching element(s) at a predetermined discrete pressure/vacuum (set point) upon rising or falling pressure/vacuum.

Adjustable Range

The span of pressure between upper and lower limits within which the pressure switch can be adjusted to actuate/deactuate. It is expressed for increasing pressure.

Set Point

That discrete pressure at which the pressure switch is adjusted to actuate/deactuate on rising or falling pressure. It must fall within the adjustable range and be called out as increasing or decreasing pressure.

Dead Band

The difference in pressure between the increasing set point and the decreasing set point. It is expressed as typical, which is an average with the increasing set point at mid range for a pressure switch with the standard K switching element. It is normally fixed (non-adjustable).

Hermetically Sealed

A welded steel capsule with glass-to-metal, factory-sealed, electrical leads that isolates the electrical switching element(s) from the environment.

Overrange

The maximum input pressure that can be continuously applied to the pressure switch without causing permanent change of set point, leakage or material failure.

Proof Pressure

The maximum input pressure that can be continuously applied to the pressure switch without causing leakage or catastrophic material failure. Permanent change of set points may occur, or the device may be rendered inoperative.

Repeatability

The ability of a pressure switch to successively operate at a set point that is approached from a starting point in the same direction and returns to the starting point over three consecutive cycles to establish a pressure profile. The closeness of the measured set point values is normally expressed as a percentage of full scale (maximum adjustable range pressure). Repeatability on SOR switches will be smaller than 1% of full scale per ISA/ ANSI S51.1.

SPDT Switching Element

Single-Pole, Double Throw (SPDT) has three connections: C – Common, NO – Normally Open and NC – Normally Closed, which allows the switching element to be electrically connected to the circuit in either NO or NC state.

DPDT Switching Element

DPDT is two synchronized SPDT switching elements which actuate together at increasing set point and deactuate together at decreasing set point. Discrete SPDT switching elements allow two independent circuits to be switched; i.e., one AC and one DC.

The synchronization linkage is factory set, and is not field adjustable. Synchronization is verified by connecting test lamps to the switching elements and observing them go "On" simultaneously at actuation and "Off" simultaneously at deactuation.

Pivot Seal Pressure Switches

Dimensions

Dimensions in this catalog are for reference only. They may be changed without notice. Contact the factory for certified drawings for a particular model number.

Notes

1. Dimensions in this catalog are expressed as millimeters over inches (Linear = mm/in.).
2. Dimensions marked with an asterisk (*) on housing dimension drawings (pages 12 through 16) vary with respect to process connection size. The chart below lists these dimension variances.
3. Electrical Connection Size: 3/4" NPT(F) standard. 1/2" NPT(F), 1/2" NPT(M), M20 x 1.5, PG 13.5, PF 3/4" optional. Consult the factory for compatibility with selected housing or agency listing.

Process Connection Size	Piston Number
	2, 3
1/4" NPT(F)	Add 14.0 / 0.55
1/2" NPT(F)	Add 24.1 / 0.95
9/16" SAE	Add 14.0 / 0.55
Length "A" 1/4" NPT(M)	Add 29.7 / 1.17
Length "A" 1/2" NPT(M)	Add 38.9 / 1.52

Weatherproof – Non-Hazardous Service (NEMA 4, 4X, IP66)

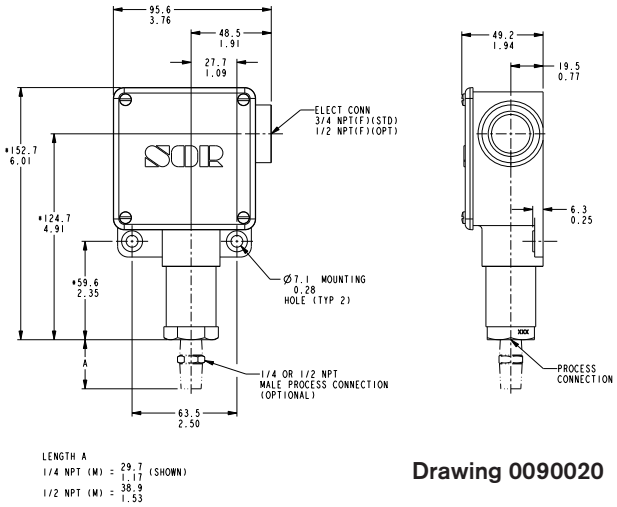

Drawing 0090020

Housing: N6

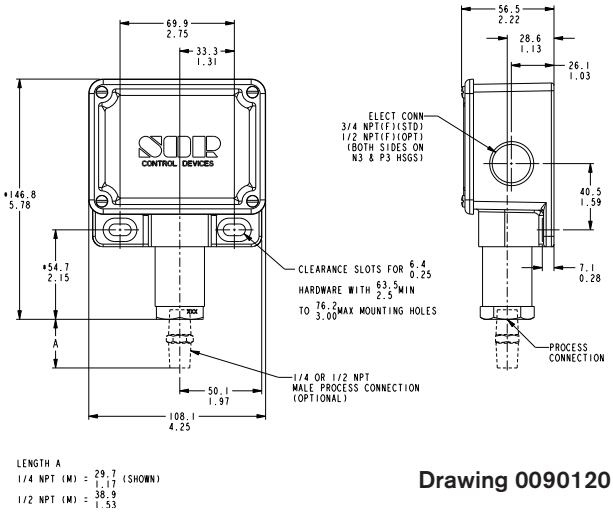

Drawing 0090120

Housing: NN, N3, N4

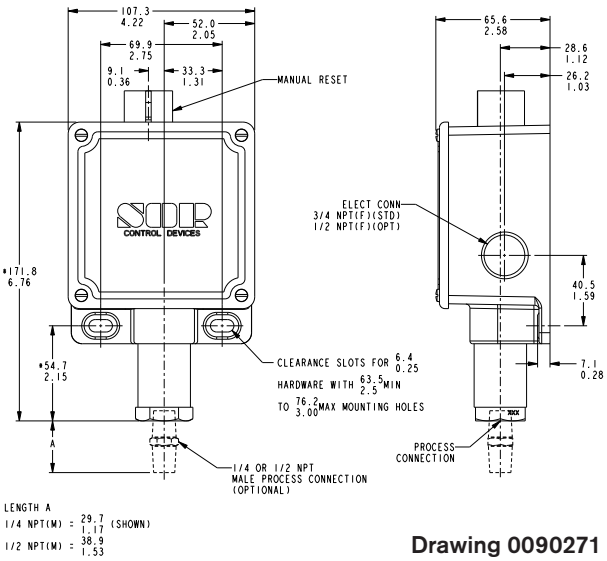

Drawing 0090271

Housing: RB Manual Reset

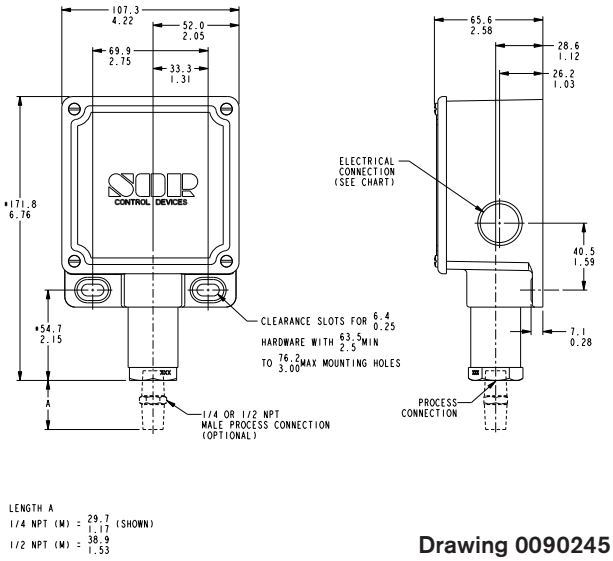

Drawing 0090245

Housing: RM, RN, RS, RT

Pivot Seal Pressure Switches

Dimensions

Dimensions in this catalog are for reference only. They may be changed without notice. Contact the factory for certified drawings for a particular model number. Dimensions in this catalog are expressed as millimeters over inches. (Linear = mm/in.)

Conventional Explosion Proof — Hazardous Service

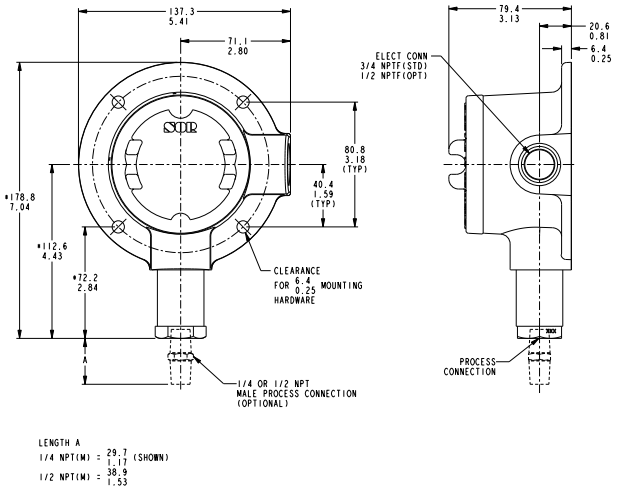

Drawing 0090144

Housing: L

Class I, Group C, D; Class II, Group E, F, G; Division 1 & 2

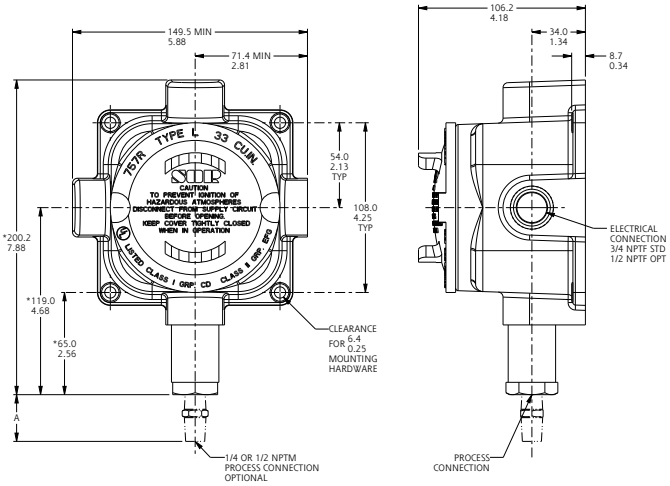

Drawing 0090408

Housing: LC

Class I, Group C, D; Class II, Group E, F, G; Division 1 & 2

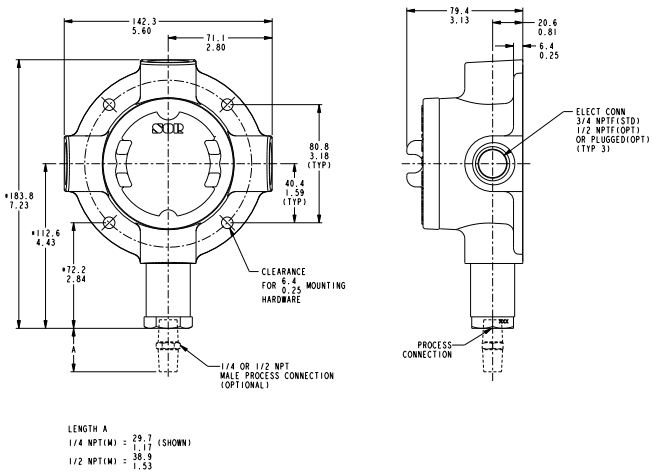

Drawing 0090147

Housing: S

Class I, Group C, D; Class II, Group E, F, G; Division 1 & 2

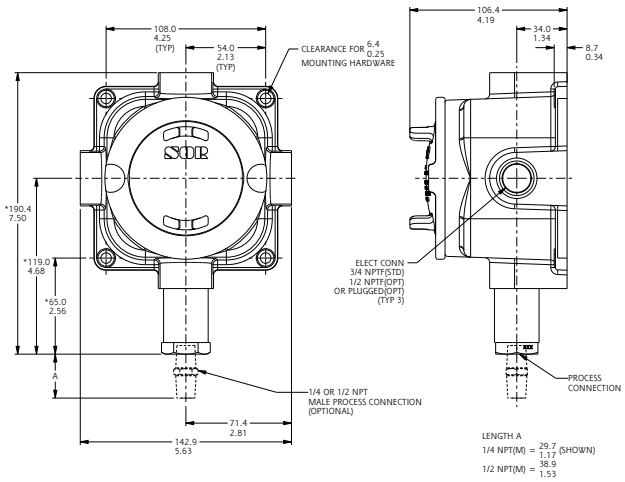

Drawing 0090103

Housing: SC

Class I, Group C, D; Class II, Group E, F, G; Division 1 & 2

Pivot Seal Pressure Switches

Dimensions

Dimensions in this catalog are for reference only. They may be changed without notice. Contact the factory for certified drawings for a particular model number. Dimensions in this catalog are expressed as millimeters over inches. (Linear = mm/in.)

Conventional Explosion Proof – Hazardous Service

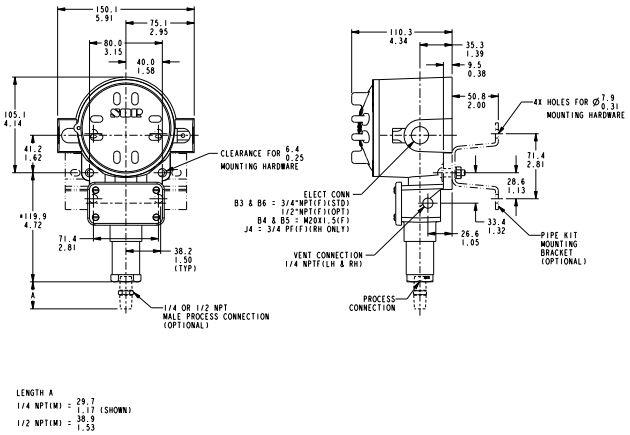

Drawing 0090882

Housing: B3, B4, B5, B6, J4

Class I, Group B, C, D; Class II, Group E, F, G; Division 1 & 2

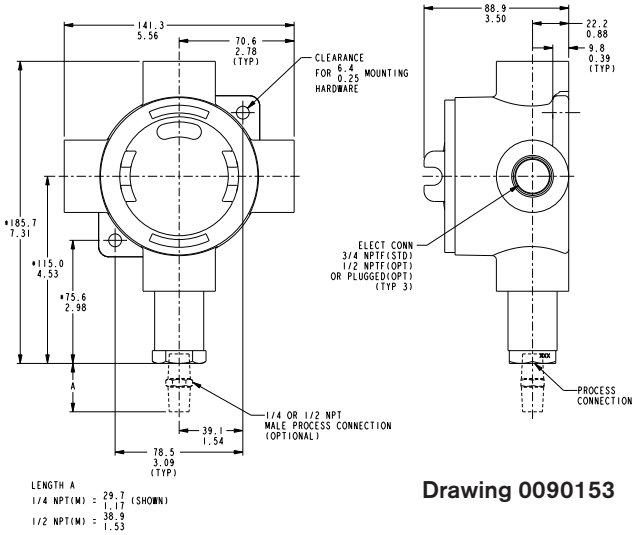

Drawing 0090153

Housing: TA

Class I, Group A, B, C, D; Class II, Group E, F, G; Division 1 & 2

Hermetically Sealed Explosion Proof – Hazardous Service

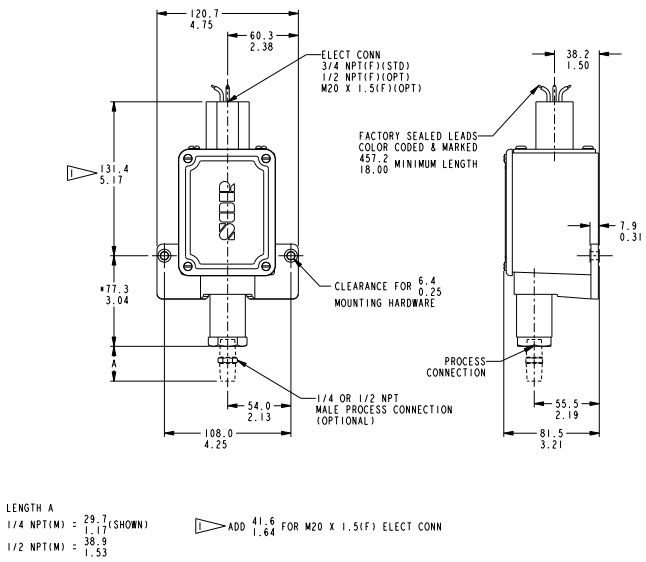

Drawing 0090174

Housing: BA

Class I, Group A, B, C, D; Class II, Group E, F, G; Division 1 & 2

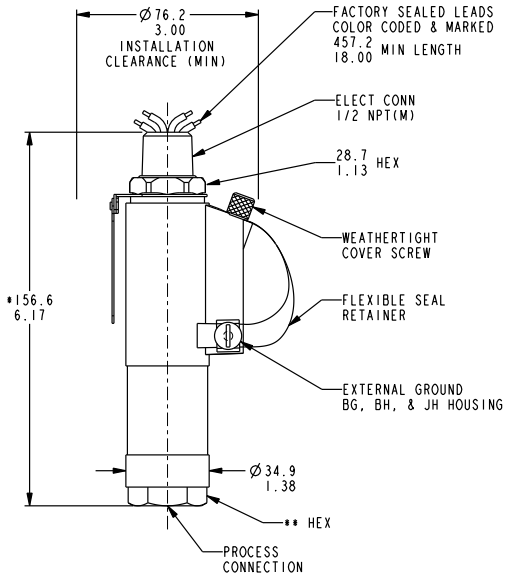

Drawing 0090119

Housing: AG, AH, BG, BH, JH

Class I, Group A, B, C, D; Class II, Group E, F, G; Division 1 & 2

Dimensions in this catalog are for reference only. They may be changed without notice. Contact the factory for certified drawings for a particular model number. Dimensions in this catalog are expressed as millimeters over inches. (Linear = mm/in.)

General Purpose – Non-Hazardous Service

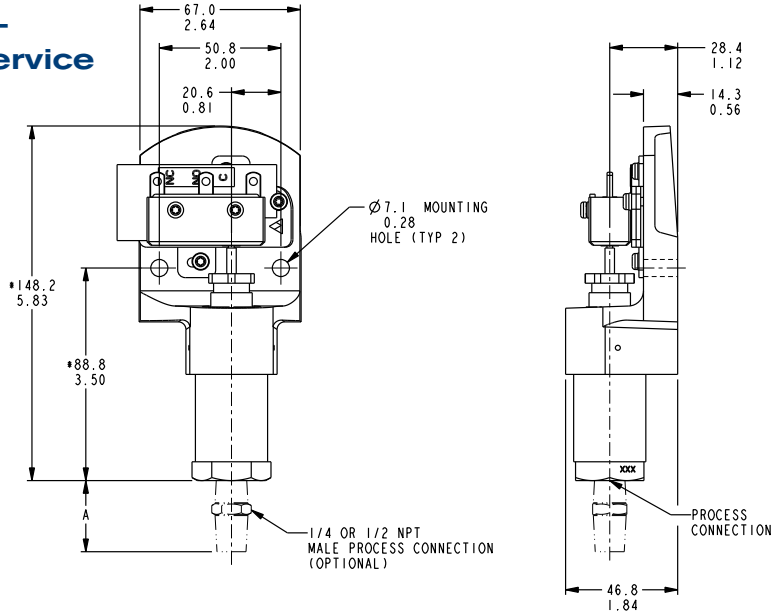

Drawing 0090027

LENGTH A
1/4 NPT (M) = 29.7 / 1.17 (SHOWN)
1/2 NPT (M) = 38.9 / 1.53

Housing: H3 Open Bracket

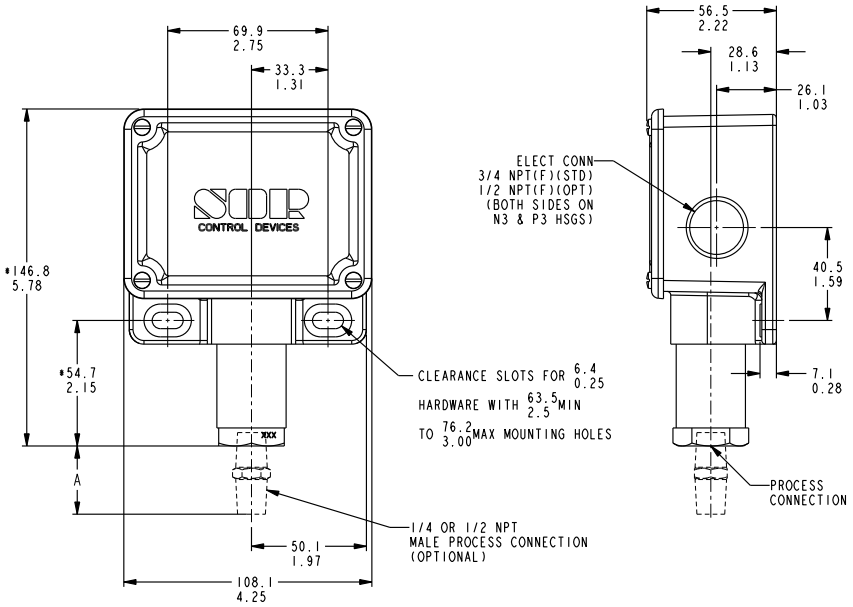

Drawing 0090120

LENGTH A
1/4 NPT (M) = 29.7 / 1.17 (SHOWN)
1/2 NPT (M) = 38.9 / 1.53

Housing: PP, P3, NEMA 1

Dimensions in this catalog are for reference only. They may be changed without notice. Contact the factory for certified drawings for a particular model number. Dimensions in this catalog are expressed as millimeters over inches. (Linear = mm/in.)

Accessories

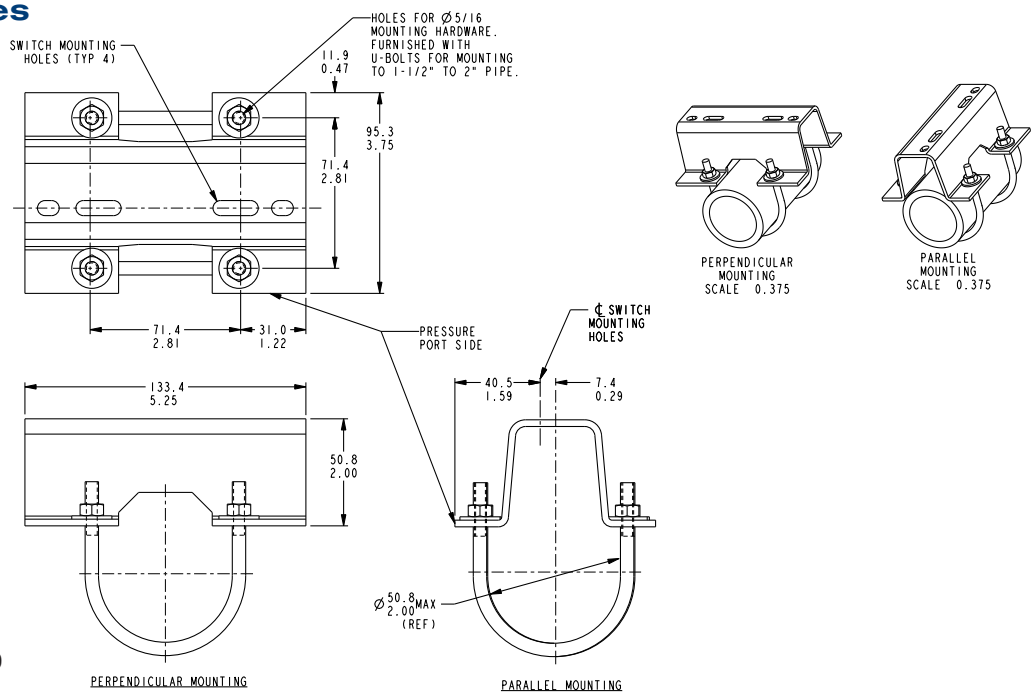

Drawing 0090300

Pipe Mounting Kit: PK

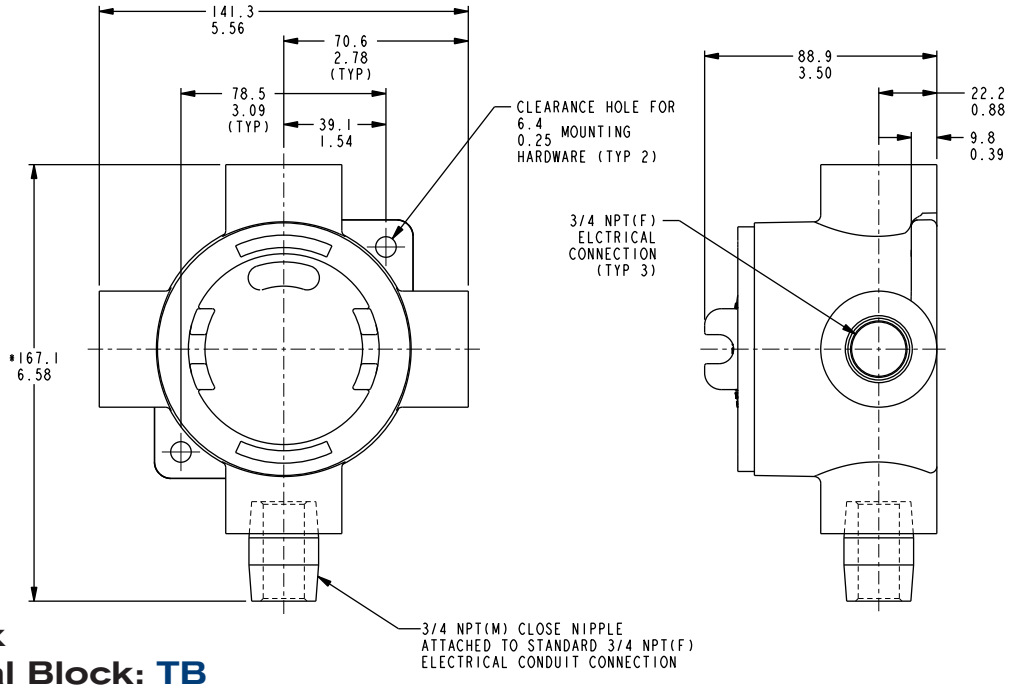

Drawing 0091353

Junction Box with Terminal Block: TB

* DIMENSION SHOWN IS APPROXIMATE AND BASED ON A 5-THREAD ENGAGEMENT.